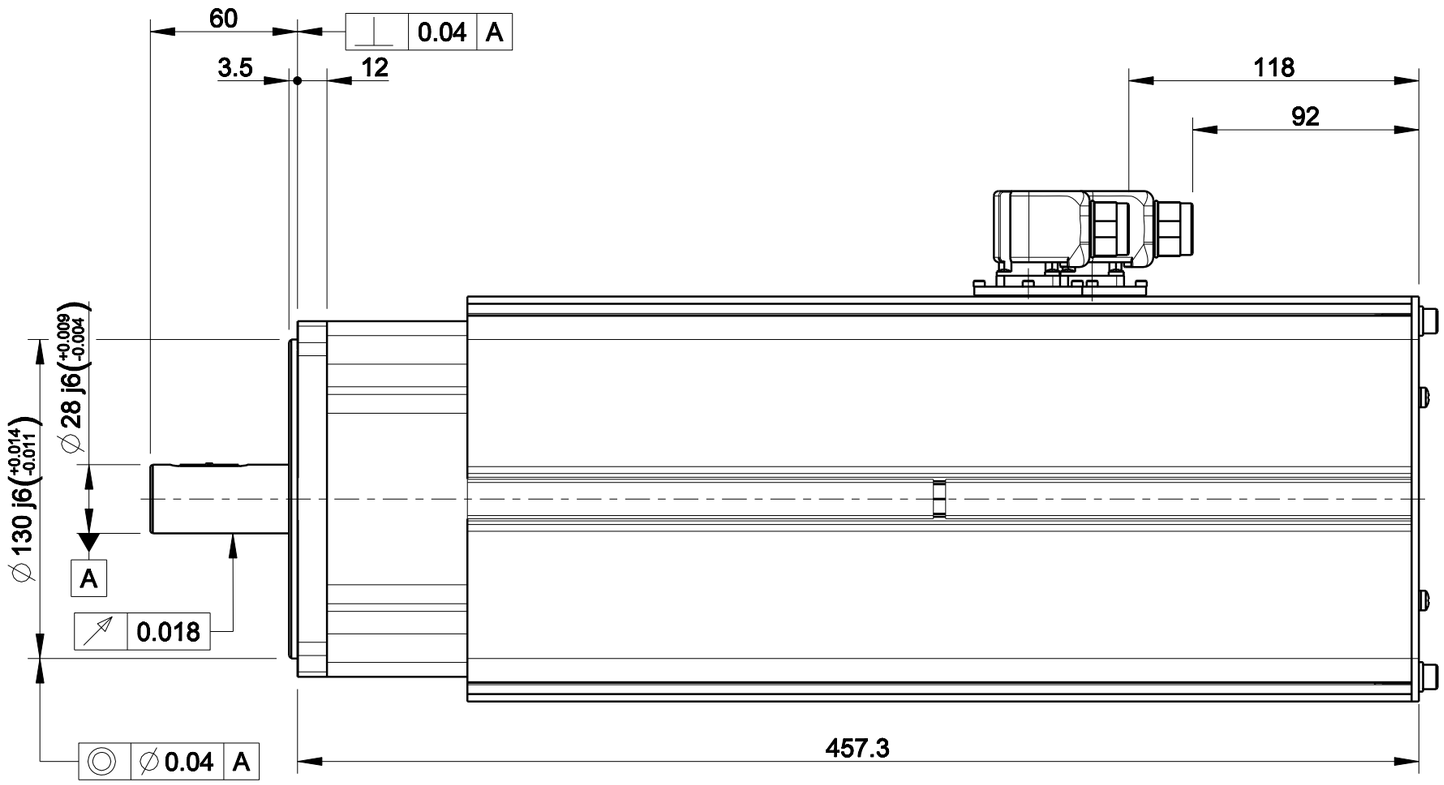

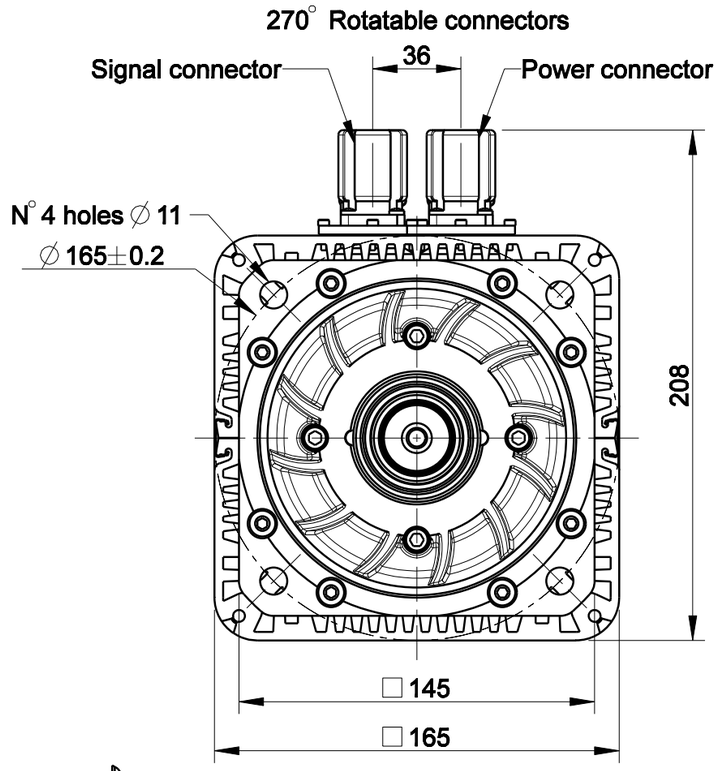

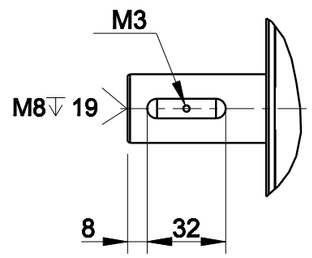

Full key:8 x 7 x 32

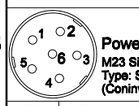

Power Connector
M23 Size 1 - 5 + PE
Type: SF5EP1N8AAD00
(Coninvers)

Pin	Description	Color
1	Phase A	Blue
2	Phase B	Red
3	GND	n.c.
4	FAN	Black
5	FAN	Black
6	Phase C	Yellow

For motors with Inom <= 30 Arms

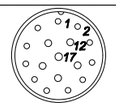

Signal Connector
Type: M23 Size 1-17 Pin

Pin	EnDat Code:C,M,N,U,Q	Resolver Code:R	SinCos Code:S
1	A+	n.c.	A+
2	A-	n.c.	A-
3	DATA+	n.c.	I+(Index)
4	PTC+	SIN-,1 c/r	Sin-(C-),1 c/r
5	CLOCK+	COS+,1 c/r	Cos+(D-),1 c/r
6	n.c.	COS-,1 c/r	Cos-(D+),1 c/r
7	0 V	RESEX+	0 V
8	KTY84+**	KTY84+**	PTC+
9	KTY84-**	KTY84-**	PTC-/KTY-**
10	+Vcc	RESEX-	+Vcc(5Vdc)
11	B+	n.c.	B+
12	B-	n.c.	B-
13	DATA-	n.c.	I-(Index)
14	CLOCK-	SIN+,1 c/r	Sin+(C+),1 c/r
15	0V sense	n.c.	0V sense
16	Vcc sense	PTC+	+Vcc sense
17	PTC-	PTC-	KTY+**

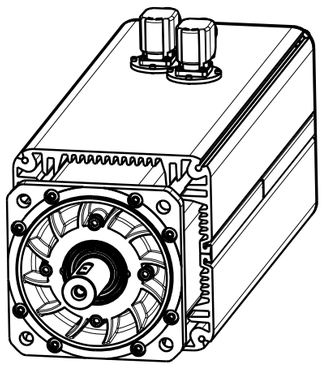

Approved

Signature	Date

材质 Material			项目 Project-Prod.item/Instrument
.			U30740F
处理 Treatment			
几何公差	GB/T1184 (ISO 2768-2) Geometrical tolerance	K	未注倒角 Undimensioned chamfers: 1x45°
未注公差	GB/T1804 (ISO 2768-1) Linear tolerance	m	描述 Description: MOTOR ASSEMBLY
角度公差	GB/T1804 (ISO 2768-1) Angular tolerance	m	.
0.5 +3 / >3+ 6 / >6+ 30 / >30+ 120 / >120 +400 / >400+ 1000 / >1000 +2000 / >2000 +4000			未注圆角 Undimensioned radii: R0,5
±0.1 / ±0.1 / ±0.2 / ±0.3 / ±0.5 / ±0.8 / ±1.2 / ±2			电机总装

	年,月,日 Date	名字 Name
设计 Designed		
校对 Checked	04/06/16	PMCNB
审核 Approved		

PHASE MOTION CONTROL
NINGBO Ltd.
宁波菲仕电机技术有限公司

图号 Drawing No.	67762N-0-A-3	版本 Rev	A
		比例 Scale	2:5
重量 Kg Mass	30.362	数量 Qty	
		页码 Sheet	1/1