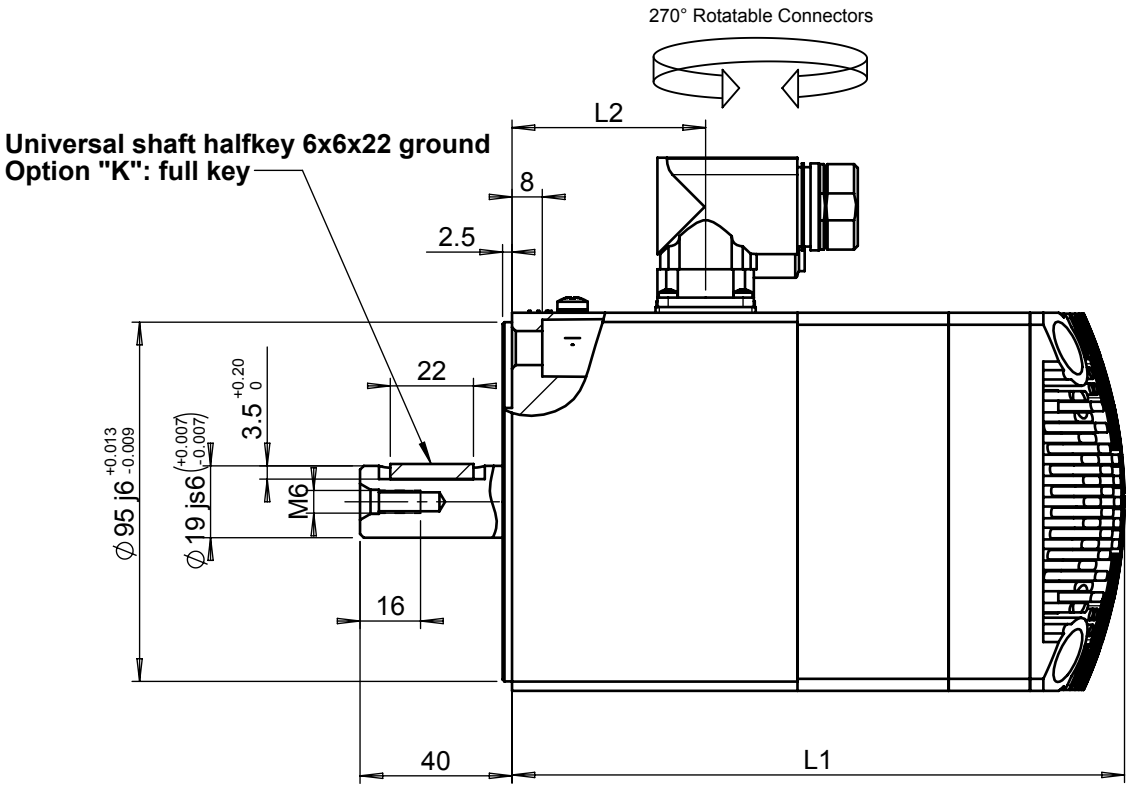

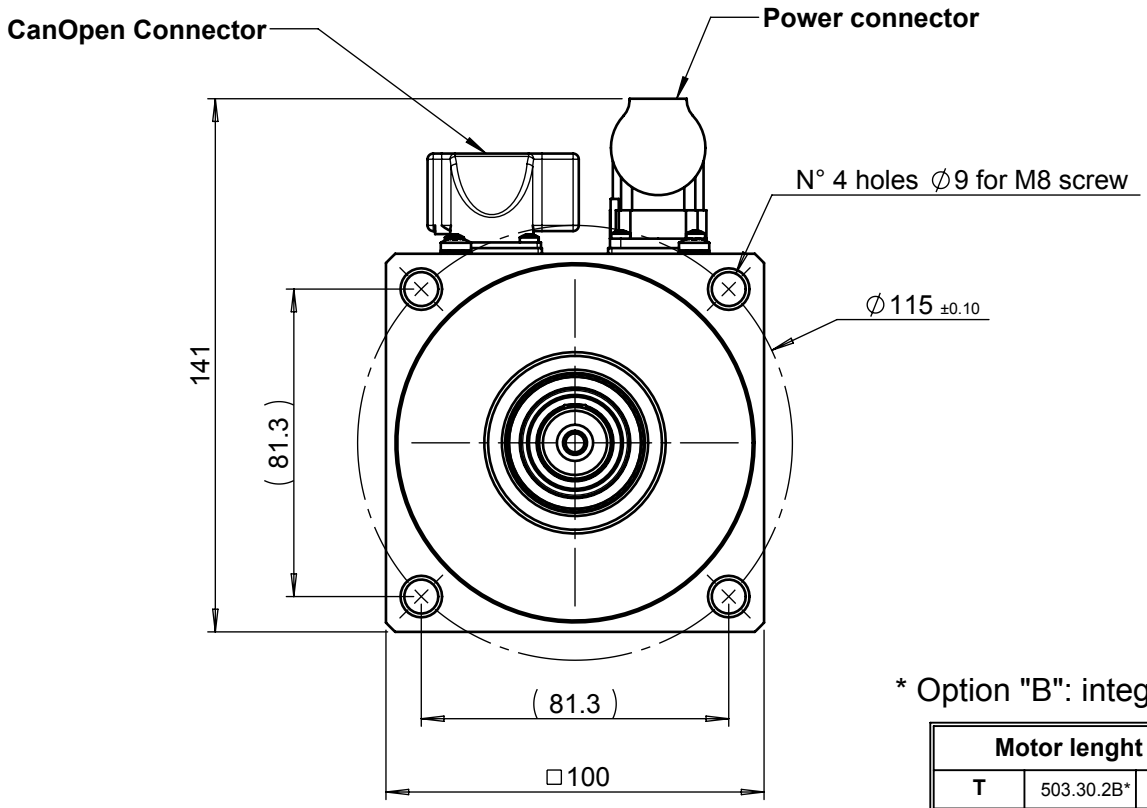

* Option "B": integral brake

Motor lenght		
T	503.30.2B*	506.20.2B*
L1(mm)	161	194.5
L2(mm)	50	83

Type: MOTOR TW50X.XX.X

TW 50X.XX.XB

PHASE MOTION CONTROL

Phase Motion Control - 16141 Genova Italy - Via Adamoli, 461 - Tel +39 010 835 161 Fax +39 010 4206736 - Email info@phase.eu - http://www.phase.eu