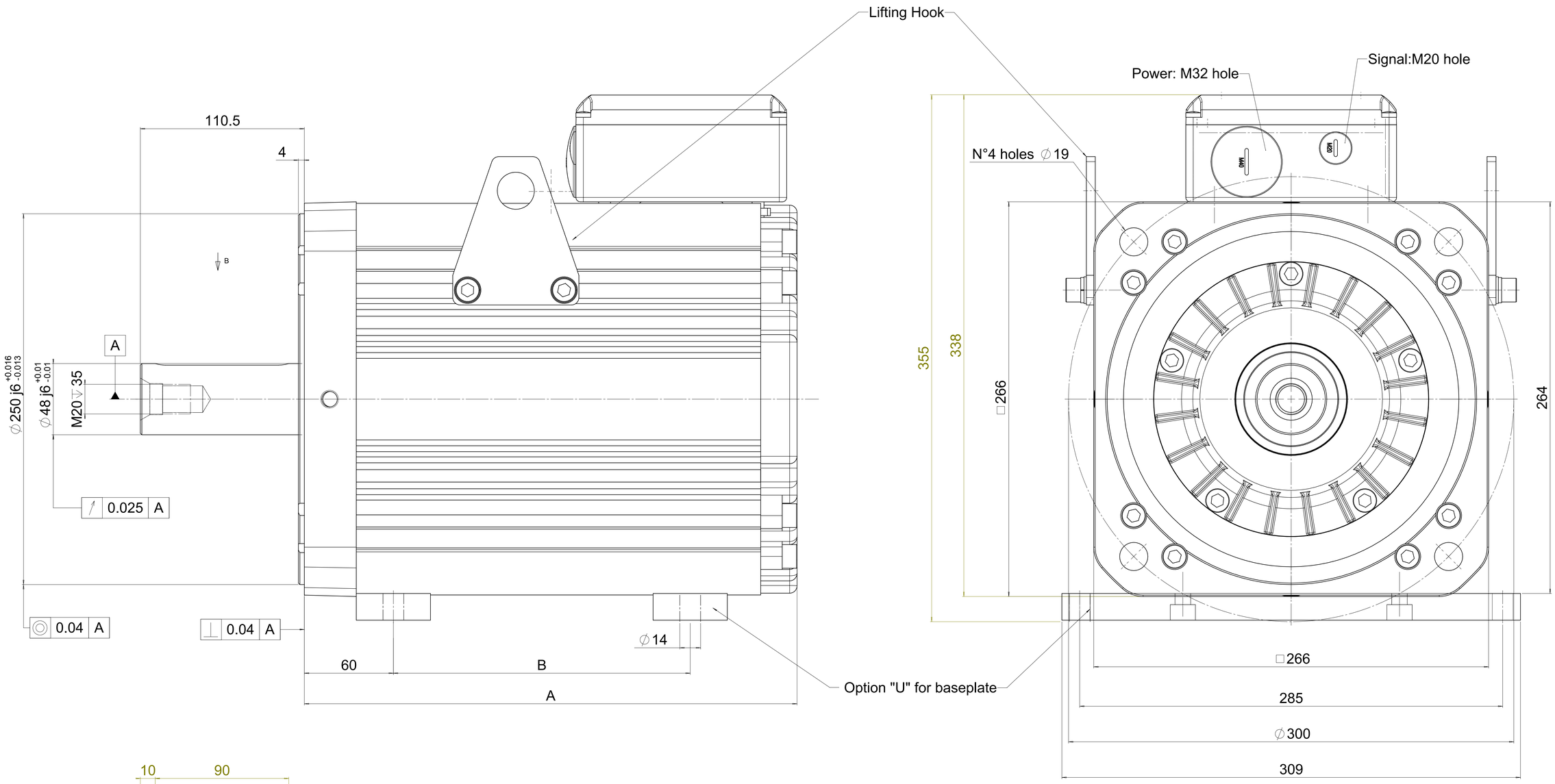

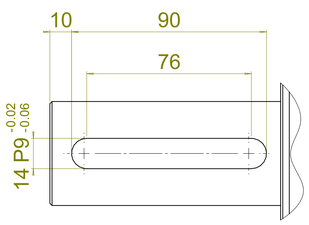

Option "k": key 14x9x90

VIEW B

TYPE	A(mm)	B(mm)
UL 1310	332	200
UL 1320	439	307
UL 1330	546	414
UL 1340	653	521

Material																							
-																							
Treatment																							
-																							
Geometrical tolerance (ISO 2768-2)																							
Linear tolerance (ISO 2768-2)																							
Angular tolerance																							
0.5 ÷3	±0.1	>3÷ 6	±0.1	>6÷ 30	±0.2	>30÷ 120	±0.3	>120 ÷400	±0.5	>400÷ 1000	±0.8	>1000 ÷2000	±1.2	>2000 ÷4000	±2								